Computational Algorithms and Numerical Dimensions

www.journal-cand.com

Com. Alg. Num. Dim Vol. 2, No. 2 (2023) 113–123.

Paper Type: Original Article

Presenting Complex, Balanced Scorecard Model and Two-Level Data Envelopment Analysis for Calculating the Performance of Social Institutions

Mehrdad Navabakhsh[1,*], Nasser Shahsavari Pour[2]

[1] Department of Sociology, Science and Research Branch, Islamic Azad University, Tehran, Iran; navabakhsh@srbiau.ac.ir.
[2] Department of Industrial Engineering, Kerman Branch, Islamic Azad University, Kerman, Iran; shahsavari_n@alum.sharif.edu.

Citation:

Navabakhsh, M., & Shahsavari Pour, N. (2023). Presenting complex, balanced scorecard model and two-level data envelopment analysis for calculating the performance of social institutions. *Computational algorithms and numerical dimensions, 2*(2), 113-123.

Received: 07/02/2023 Reviewed: 09/03/2023 Revised: 11/04/2023 Accepted: 08/05/2023

Abstract

Until the 1980s, the system for assessing the performance of organizations with specific structures has been based on economic and financial indexes. The previous methods that were frequently used for performance assessment were mainly focused on the economic-financial aspects of the organization. However, at present, due to vast human needs, sensitive cognitive, fundamental parameters in social organizations that are based on realities, are very effective, and meet scientific criteria have come into vogue. These parameters rely on experience, observation, experiment, hypothesis, and theory. Balanced Scorecard (BSC) seeks to make a balance between financial and economic objectives as outcomes of past performance (past-oriented indexes) and three indexes of customer processes, learning and growth, and development of human and social forces (future-oriented).

Data Envelopment Analysis (DEA) is a non-parametric method for measuring the outputs or efficiency of homogeneous units with different inputs and outputs. However, in cases where there are numerous inputs and outputs with some similarities, their efficiency can be measured by two-level DEA, i.e., classifying them and using common weights.

In primitive social institutions, the inputs of social systems are mainly limited and clear. However, in modern, complex, standardized systems, the input is both expanded and diversified. Therefore, in this paper, we have tried to use BSC as an instrument for designing performance assessment indexes and two-level DEA as an instrument for measurement.

Keywords: Balanced scoredcard, Data envelopment analysis, Performance assessment of social institutions, Development.

1 | Introduction

In 1978, Charnes et al. [1] established a method of efficiency or output measurement, which is considered to be one of the acceptable, popular methods that provide managers significant assistance in a better understanding of the area they are managing. In the last two decades, numerous papers and reports have been published in internationally reputable journals. It indicates that the method has gained acceptance in practice.

In the two papers published in the International Journal of Management Sciences, the Data Envelopment Analysis (DEA) approach was used to calculate a combination of Decision-Making Units (DMUs) with some similar input and output indexes. In these two research studies, the identical

Corresponding Author: navabakhsh@srbiau.ac.ir

https://doi.org/10.22105/cand.2023.190897

input and output indexes are placed in categories, and their weight value is calculated within the DEA framework.

In the real world, many problems have such properties. For instance, the assessment of R & D projects, the calculation of the efficiency of universities, performance assessment for productive structures, and, most importantly, the calculation of social organizations in cultural and evolutionary areas can be cited as examples of such issues.

In addition to the simplicity of calculations, this approach uses average weight value and enjoys more discrimination power compared with single-level approaches. In this study, we intend to concentrate on combining this approach with the Balanced Scorecard (BSC) technique. BSCs explore the extent of fulfillment of organizational goals from different aspects. In the BSCs technique, the effectiveness of organizational strategies is measured through the identification of indexes for the achievement of goals. The BSCs technique divides its indexes under four categories: financial-economic perspective, customer processes, and learning, growth, and development of social-human forces. They tried to establish a balance between financial objectives as a result of past performance (a priori indexes) and three other indexes (a posteriori indexes). In fact, it tries to scrutinize an absolute relation between the social planning system for human-oriented organizations that are based on the life opportunities and lifestyles of the people, the goals that planners consider for such systems and their expenditures.

The combinational method of BSCs and DEA that forms a strong instrument has been created recently. The strengths of BSC methods in the selection of indexes, on the one hand, and the capability of DEA in the exact measurement of efficiency, on the other hand, have caused the combinational method to emerge as an effective tool for measuring organizational performance. Dean of Industrial College of Technix University, used the combinational BSE-DEA method for the first time for the assessment of R&D projects. In his two papers, he was trying to find a way to measure organizational efficiency after using balanced measurement. He used DEA as the core model [2], [3]. Furthermore, in another paper, Benker [4] used the BSC as its core model and the DEA algorithm as an auxiliary method.

On the one hand, the presence of numerous social indexes in four areas of BSC inputs and outputs has created some problems for calculation and measurement. On the other hand, using two-level DEA and placing similar indexes in categories of BSCs has made calculation practically easier.

The present research aims to develop a suitable socio-cultural model for measuring organizational efficiency and productivity and identifying organizational weaknesses and strengths. Furthermore, it can suggest mechanisms for consolidating the strengths and minimizing the weaknesses of the organization in the future.

In the Section 2, we review the BSC method. The Section 3 discusses DEA in detail. Two systems of performance assessment, i.e., BSCs and two-level DEA, and the assessment algorithm of the combinational method are discussed in Section 4. Section 5 is devoted to the application of the model, and in Section 6, some conclusions are drawn.

2 | Balanced Score Card

In the 1990s, the BSC model was used first as a new method of performance assessment and later as a tool for the realization of strategy, or better to say, a system for strategy by Robert Coplan, the famous professor of Harvard University and David Norton, the distinguished management advisor in America and was embraced by scholars of management and organization managers.

Research on organizational management reveals that the traditional systems of calculating organization assets merely accounted for tangible assets such as equipment, land, existing materials, etc., and were

Navabakhsh and Shahsavari Pour| Com. Alg. Num. Dim. 2(2) (2023) 113-123

not capable of calculating the human assets[1], including personnel satisfaction and flexibility of users of mass culture, interactions, socialism, and the like. Therefore, systems that are capable of measuring and calculating such assets are seriously needed. In fact, performance measurement systems are considered the strongest and most needed management systems in managing modern human and social organizations. Certainly, without such a system, strategic decision-making, measuring the extent of strategy implementation, and evaluating performance and organizational processes in modern societies seem to be very difficult.

Insufficiency of financial criteria for performance measurement made organization planners evaluate their other activities such as human interactions, innovative processes, sociability, culturalization, and training users, and add other criteria to financial ones for measuring their performance." Although the combination of these activities is the cornerstone of success for any organization, few people are able to select, through effective management, the appropriate criteria for such activities in a way that they lead the organization towards their perspective and mission" [5], [6]; a perspective that is considered as the core of BSC for translating missions and strategies into goals and criteria. It shall be emphasized that BSC is not simply a control system, and its criteria are not merely used for describing past performance. Rather, such criteria will be instrumental in determining and transferring organizational strategy so that they are designed for converging and coordinating innovations at individual, departmental, and organizational levels so that obtaining common goals is made possible. Of course, selecting an appropriate instrument for performance measurement is not sufficient in itself, and progressive organizations use performance measurement results to improve and successfully implement their strategies.

This card is a conceptual framework designed for translating the strategic goals of an organization into a collection of performance indexes, which are usually selected from among four aspects of finance, customers, internal processes, and learning, growth, and development for measuring social institutions and organization and can be presented as the model bellow [3], [5].

In fact, the organization can use this card to keep informed of its economic and social performance, outputs of internal processes, and efforts for improving the motivation and training of its personnel and its learning system. Therefore, by utilizing BSCs in organizations, we can move towards implementing organizational strategies by understanding the existing conditions and identifying appropriate indexes for evaluation.[2], [5], [6], [7].

We can summarize the four dimensions of BSCs by answering the following questions:

Financial-economic measures

What are the expectations and demands of shareholders from a social organization? What goals, measures, and executive plans are required for the fulfillment of beneficiaries` expectations?

Customer perspectives (the social clientele)

What are the expectations of the people from a social system? What goals, measures, and executive plans are required for the fulfillment of public expectations?

Internal process perspective

What activities shall be carried out to fulfill public and government expectations and demands? What key processes are required for such activities?

[1] Nowadays it is sometimes called social capital

Learning and growth perspective

Since the needs of the people, governing bodies, and beneficiaries are identified. The processes required to fulfill such needs are determined; the next question is, who is responsible for carrying out these activities and processes? What human resources, information technology, and organizational infrastructures shall exist to ensure effective, efficient work?

Put briefly, the process of compilation and implementation of the balanced evaluation method and its application in society-centered organizations helps managers to synchronize their strategies at different levels of the organization and ensure that all members of the organization are well-informed of the long-term goals of their unit and the strategies that the organization has adopted for achieving such goals. This model is a technique for translating strategy into practice and making goals, missions, and strategies operational. It is focused on reviewing the future perspective of the organization.

3 | Data Envelopment Analysis

In 1957, Farrell [8] started to measure the efficiency of production units for the first time. In this model, efficiency was taken as equal to the proportion of inputs to outputs. The inherent problem with this model was the assumption that inputs and outputs are of the same importance. However, contrary to many production units, in public-centered organizations, inputs and outputs do not have the same degree of importance. Using outputs and inputs of DMUs, he processed the production function on a collection of inputs and outputs in a way that the outcome was a linear segmental function.

Suppose that there exists n DMUs in the form of {DMUj: j=1,...,n}, each using m different inputs for producing s outputs, with yrj and xij as rth output of r=(1,…, s), respectively and ith input of i= (1,…, m) of the j th DMU j=(1,…, n).

If we suppose that u=(u1,u2,…, us) and v= (v1,v2,…, vm) are vectors of weights for outputs and inputs, respectively, the efficiency of DMUp as a multiple and input will be as follows:

$$\begin{aligned}
&\max \quad E = \sum_{r=1}^{S} U_r y_{rp}, \\
&\text{S.t.} \quad \sum_{r=1}^{S} U_r y_{rj} - \sum_{i=1}^{m} V_i x_{ij} \le 0, \qquad j = 1, \ldots . n, \\
&\sum_{i=1}^{m} V_i x_{IP} = 1, \\
&V_i \ge \varepsilon, \qquad i = 1, \ldots . n, \\
&U_r \ge \varepsilon, \qquad r = 1, \ldots . s.
\end{aligned} \tag{1}$$

The multiple dual *Eq. (1)* is called the envelopment form of the CCR model with the input nature and θ is called the relative efficiency of DMUs. If θ^* is the optimum amount of the target function, then $0 \le \theta^* \le 1$ [6].

$$\begin{aligned}
&\min \quad \theta, \\
&\text{s.t.} \quad \theta X_p - \sum_{j=1}^{n} \lambda_j X_{ij} \ge 0, \qquad \text{CCR envelopment form, with input nature} \\
&\sum_{j=1}^{n} \lambda_j Y_{rj} \ge Y_{rp}, \\
&\lambda_j \ge 0.
\end{aligned} \tag{2}$$

Navabakhsh and Shahsavari Pour| Com. Alg. Num. Dim. 2(2) (2023) 113-123

The amount of θ^* indicates relative efficiency, and each DMU that is not located on the borderline is inefficient. The aim of the CCR input model is to reduce the maximum amount of inputs with the proportion of θ^* in a way that at least the same output can be produced.

Generally, in models that are input in nature, with the reduction of DMUP input, if it is inefficient, we lead it towards the border to make it efficient. The amount of input decrease is $\theta^* x_p$, which is an amount of input that could at least produce y_p, $(1\_\theta^*)x_p$ is an amount of wasted input and (1_θ^*) is called the amount of inefficiency [2], [9].

4 | The Combinational, Two-Level Model of DEA and BSC and Modeling

We know that one of the main reasons for the failure of human-centered organizations is the improper application of organizational strategy. To prevent such failure, the organizations shall be able to measure the extent of their success in the framework of organization strategy or, to put it more clearly, calculate its effectiveness. It means that they shall see whether it is in accordance with their strategy or not. Calculating the efficiency with the help of DEA has always been faced with a fundamental problem, i.e., the managers and ruling governments who try to influence the compilation of indexes to draw a rosy picture of their performance. This method, despite its valuable capabilities, never makes any suggestion on the compilation and identification of indexes.

However, one of the advantages of BSCs concerns index compilation. In other words, the socio-cultural concepts that are usually very general and lack any measurement and evaluation model are turned into quantitative indexes. After careful measurement and indexation of requirements, the ways to remove these needs and obtain the goals can be presented through qualitative analysis of lifestyles and changes in the lives of the users, the people. Therefore, using BSCs for the compilation of indexes that are formed in proportion to organization strategies can enhance our capabilities if used in combination with DEA.

BSCs create the strategic maps in four perspectives: 1) people-centeredness, 2) internal processes (how institutions fulfill needs), 3) learning and innovation, and 4) growth, development, and evolution. This map then helps to prepare indexes in each perspective, which follow the cause-and-effect relationship that exists among sub-strategies in the strategic map. One of the interesting points in the BSC method is that it considered all of these indexes together, although an increase in one index may lead to a temporary decrease in another.

Fig. 1 shows that the indexes in each domain can be considered within the framework of input or output indexes in that domain.

Considering all inputs and outputs in a DMU has its problems, chief among them are the huge number of input and output indexes. Furthermore, since all domains do not have equal value, the calculated efficiencies may look unreal. *Fig. 2* shows the single-level evaluation model.

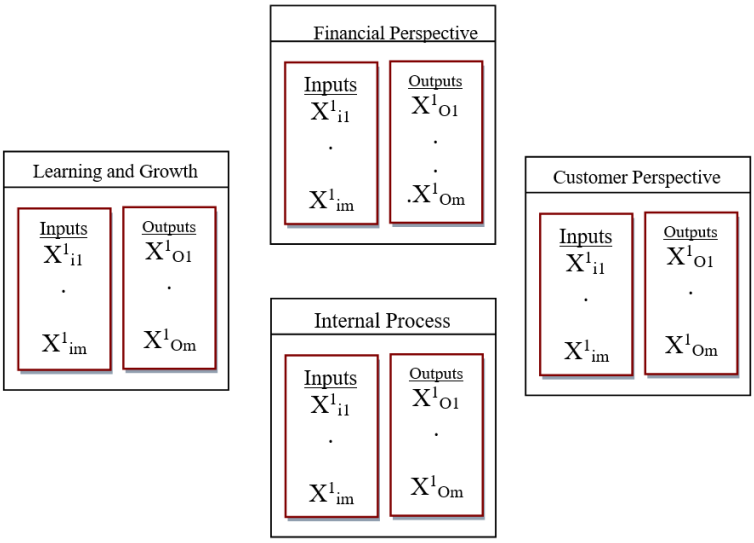

Fig. 1. Four domains of balanced scorecards, with input and output indexes.

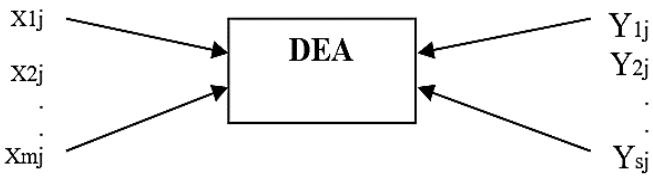

Fig. 2. Single-level DEA evaluation model.

Now, if we can classify the input and output indexes into four categories, which are in the four domains of BSCs, we can easily account for the weight of each domain. As shown in *Fig. 3*, we consider a DMU with four inputs and four outputs, which have the same order as the four domains of BSCs (learning, innovation, growth and development, internal processes, people, and financial-economic domain). These four domains are located on the same level, and the indexes for each will be placed on the second level.

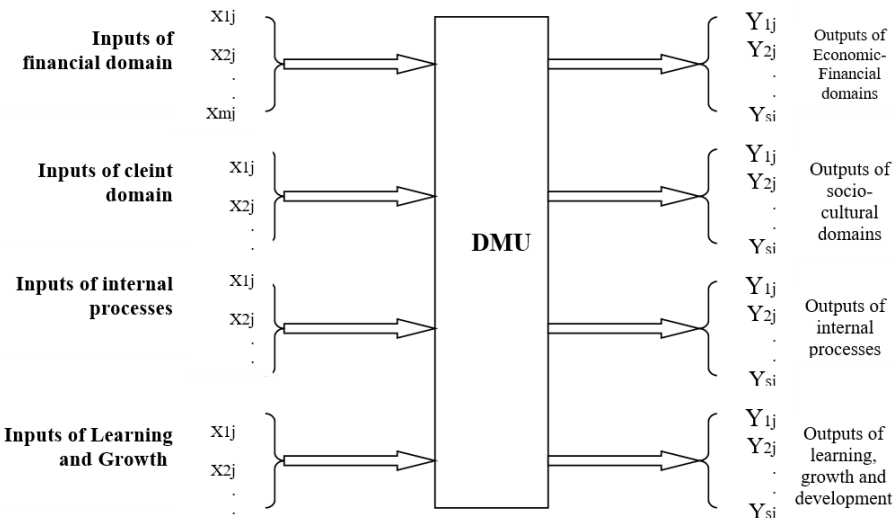

Fig. 3. The synthetic model with four categories of inputs and outputs.

Navabakhsh and Shahsavari Pour| Com. Alg. Num. Dim. 2(2) (2023) 113-123

If we consider k(k=1…4) as the inputs` counter and t(t=1…4) as the outputs` counter, and $\bar{u}=(\bar{u}_1,\bar{u}_2,\bar{u}_3,\bar{u}_4)$ and $\bar{v}=(\bar{v}_1,\bar{v}_2,\bar{v}_3,\bar{v}_4)$ are weight vectors for inputs and outputs (input and output domains at level 1), then the efficiency of DMU_P in the multiple form and input nature will be as follows:

$$\begin{aligned}
&\max \quad E = \sum_{t=1}^{4} \bar{u}_t \bar{y}_{tp}, \\
&\text{s.t.} \quad \sum_{k=1}^{4} \bar{v}_k \bar{x}_{kP} = 1, \\
&\qquad \sum_{t=1}^{4} \bar{u}_t \bar{y}_{tj} - - \sum_{k=1}^{4} \bar{v}_k \bar{x}_{kj} \le 0, \qquad j = 1,\ldots.n, \\
&\bar{v}_k \ge \varepsilon, \qquad k = 1,\ldots.4, \\
&\bar{u}_t \ge \varepsilon, \qquad t = 1,\ldots.4.
\end{aligned} \tag{3}$$

Quantities $\bar{x}_{kj}$ and $\bar{y}_{tj}$ are cumulative input and output, respectively, and if AK is the counter for indexes of four input categories (input indexes at the second level) and Bt is the counter for output indexes for four categories (output indexes at level 2) $\bar{x}_{kj}$ and $\bar{y}_{tj}$ will be defined as follows:

$$\bar{x}_{kj} = \sum_{i \in Ak} v_{ik} x_{ikj}, \qquad \sum_{i \in Ak} v_{ik} = 1,$$
$$\bar{y}_{tj} = \sum_{r \in Bt} u_{rt} y_{rtj}, \qquad \sum_{r \in Bt} u_{rt} = 1.$$

Now, by placing the above relation in *Eq. (4)*, we have

$$\begin{aligned}
&\max \quad E = \sum_{t=1}^{4} \bar{u}_t \sum_{r \in Bt} u_{rt} y_{rtp} \\
&\text{s.t.} \quad \sum_{k=1}^{4} \bar{v}_k \sum_{i \in Ak} v_{ik} x_{ikP} = 1, \\
&\qquad \sum_{t=1}^{4} \bar{u}_t \sum_{r \in Bt} u_{rt} y_{rtj} \quad \sum_{k=1}^{4} \bar{v}_k \sum_{k \in Ak} v_{ik} x_{ikj} \le 0, \qquad j = 1,\ldots.n, \\
&\sum_{i \in Ak} v_{ik} = 1, \qquad k = 1\ldots4, \\
&\sum_{r \in Bt} u_{rt} = 1, \qquad t = 1\ldots4, \\
&\bar{v}_k \ge \varepsilon, \qquad k = 1,\ldots.4 \\
&\bar{u}_t \ge \varepsilon, \qquad t = 1,\ldots.4.
\end{aligned} \tag{4}$$

The above programming model is considered a non-linear model that will be converted to a linear model with the following assumptions:

$$\bar{v}_k * v_{ik} = \hat{v}_{ik}, \quad \& \quad \bar{u}_t * u_{rt} = \hat{u}_{rt}.$$

$$\begin{aligned}
&\max \quad E = \sum_{t=1}^{4} \sum_{r \in Bt} \hat{u}_{rt} y_{rtp}, \\
&\text{s.t.} \quad \sum_{k=1}^{4} \sum_{i \in Ak} \hat{v}_{ik} x_{ikP} = 1,
\end{aligned} \tag{5}$$

$$\sum_{t=1}^{4} \sum_{r\in Bt} \hat{u}_{rt} y_{rtj} - \sum_{k=1}^{4} \sum_{k\in Ak} \hat{v}_{ik} x_{ikj} \le 0, \qquad j = 1, \ldots . n,$$
$$\sum_{i\in Ak} \hat{v}_{ik} = v_k, \qquad k = 1 \ldots 4,$$
$$\sum_{r\in Bt} \hat{u}_{rt} = u_t, \qquad t = 1 \ldots 4,$$
$$\hat{u}_{rt} \ge 0, \qquad \hat{v}_{ik} \ge 0.$$

Regarding the number of variables, the above two-level model is not different from the single-level model, and in both cases, we will have m+s variables. The above model will be exactly the same as the enveloping CCR model, except for $\sum_{i\in Ak} \hat{v}_{ik} = \bar{v}_k$ and $\sum_{r\in Bt} \hat{u}_{rt} = \bar{u}_t$ constraints. Of course, variables $\hat{v}_{ik}$ and $\hat{u}_{rt}$ can be equal to zero and do not need to be positive. No doubt, due to the higher number of constraints in the bi-level model, the efficiency achieved is higher than in the uni-level model.

Now, if we want to have the dual model for the above, we use model *Form (2)*.

$$\begin{aligned}
&\min \quad \theta, \\
&\text{s.t.} \quad \sum_{j=1}^{n} \lambda_j \Big(\sum_{i\in AK} v_{ik} x_{ikj}\Big) + S_k^+ = \theta \sum_{i\in AK} v_{ik} x_{ikp}, \qquad k = 1 \ldots 4, \\
&\qquad \sum_{j=1}^{n} \lambda_j \Big(\sum_{r\in Bt} U_{rt} Y_{rtj}\Big) + S_t^- = \sum_{r\in Bt} U_{rt} y_{rtp}, \qquad t = 1 \ldots 4, \\
&\qquad \sum_{i\in Ak} v_{ik} = 1, \qquad k = 1 \ldots 4, \\
&\qquad \sum_{ri\in Bt} u_{rt} = 1, \qquad t = 1 \ldots 4, \\
&\qquad \lambda_j \ge 0, \qquad S_k^+ \ge 0, \qquad S_r^- \ge 0.
\end{aligned} \tag{6}$$

The terms $\lambda_j * u_{rt}$ and $\lambda_j * v_{ik}$ are non-linear and will be written as linear ones by the following conversions:

$$\lambda_j * v_{ik} = \alpha_{ikj}, \quad \& \quad \lambda_j * v_{ik} = \alpha_{ikj}.$$

$$\begin{aligned}
&\min \quad \theta, \\
&\text{s.t.} \quad \sum_{j=1}^{n} \sum_{i\in Ak} \alpha_{ikj} x_{ikj} + S_k^+ = \theta \sum_{i\in Ak} v_{ik} x_{ikp}, \qquad k = 1 \ldots 4, \\
&\qquad \sum_{j=1}^{n} \sum_{r\in Bt} \beta_{rtj} Y_{rtj} + S_t^- = \sum_{r\in Bt} u_{rt} y_{rtp}, \qquad t = 1 \ldots 4, \\
&\qquad \sum_{i\in Ak} \alpha_{ikj} = \lambda_j, \qquad k = 1 \ldots 4 \quad j = 1 \ldots n, \\
&\qquad \sum_{ri\in Bt} \beta_{rtj} = \lambda_j, \qquad t = 1 \ldots 4 \quad j = 1 \ldots n, \\
&\qquad \alpha_{jkj} \ge 0, \quad \beta_{rtj} \ge 0, \quad S_k^+ \ge 0, \quad S_r^- \ge 0, \quad v_{ik} \ge 0, \quad u_{rt} \ge 0.
\end{aligned} \tag{7}$$

5 | Implementing a Two-Level Combinational Model

In the previous parts, the steps that shall be considered in a synthetic system of scored cards and two-level DEA were described. To implement the model and extract the results, the data related to six

Navabakhsh and Shahsavari Pour| Com. Alg. Num. Dim. 2(2) (2023) 113-123

branches of a commercial bank were collected in accordance with the indexes extracted from BSCs, and the final results were extracted and analyzed using LINGO software.

Fig. 4 shows the indexes for four domains of score cards.

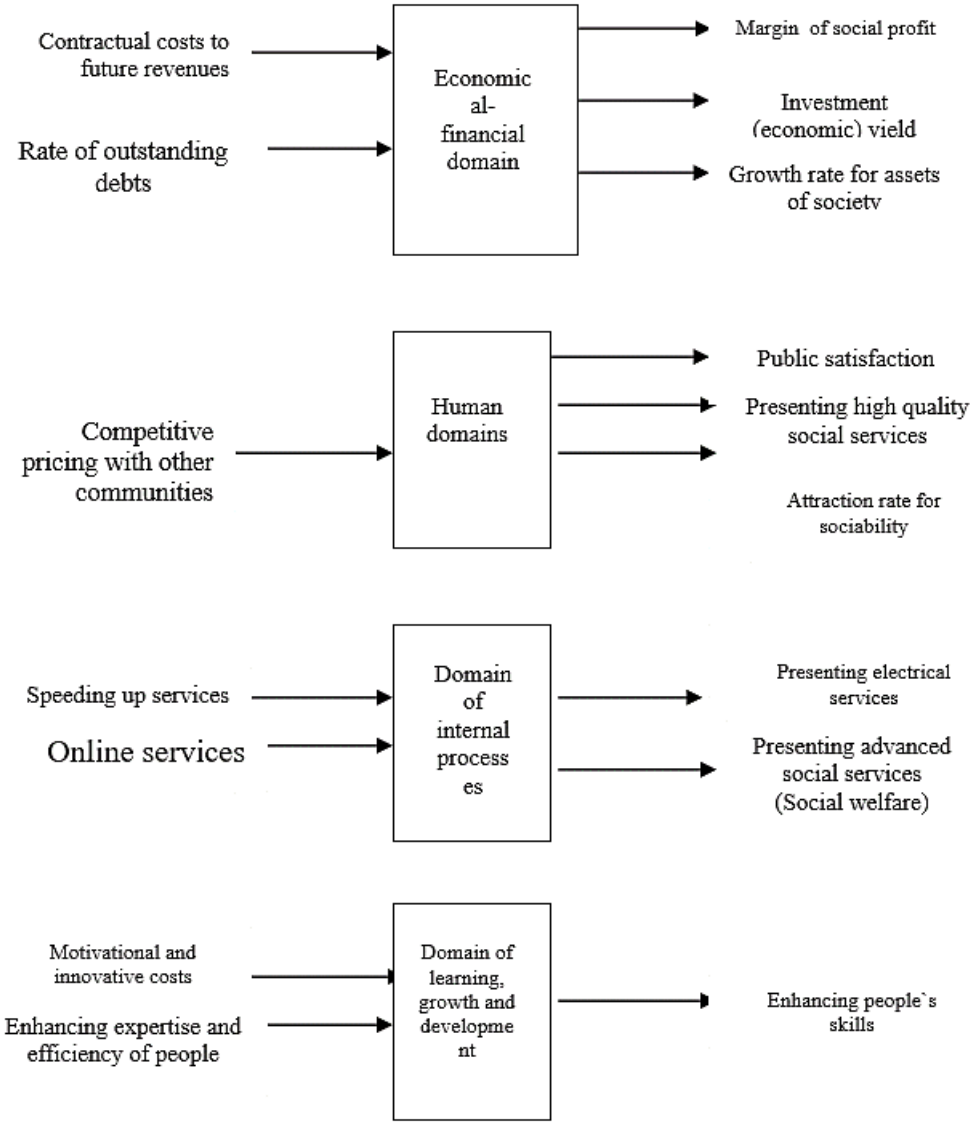

Fig. 4. Indexes of score cards in four different domains.

Table 1 and *Table 2* show the information for input and output indexes.

Table 1. Information for indexes.

Attraction Rate of Sociability	Presenting High-Quality Social Services	Public Satisfaction	Margin of Profit	Investment Yield	Growth Rate for Social Assets	Competitive Pricing, with Other Communities	Rate of Delayed Loan Facilities	Investment Costs	
22.91%	3.19%	3.25%	1.48%	4.81%	17.42%	15.7%	2.68%	52.84%	DMU1
25.8%	3.61%	3.21%	2.62%	7.16%	12.98%	18.9%	9.5%	42.77%	DMU2
29%	3.34%	3.41%	8%	7%	47.59%	34%	15%	60%	DMU3
34.50%	3.41%	3.12%	2.7%	1.4%	18.9%	33.5%	8.5%	60.2%	DMU4
21.8%	3.93%	3.43%	3%	1.23%	20.13%	30.4%	7.3%	57.9%	DMU5
13%	3.5%	3.74%	4%	1.02%	10.28%	12%	14%	96%	DMU6

Table 2. Information for indexes.

Presenting High Quality Social Services (Social Welfare)	Online Services	Enhancing Clerical Skills (The Public)	Enhancing Expertise and Skills (People)	Motivational and Innovative Costs	Presenting Electronic Services	Speeding up Social Services	
91	1376	58.54	12.11	%23.03	1305	800	DMU1
57	1896	30.80	11.96	%18.72	1906	692	DMU2
8	1842	46.25	12.08	%18.5	1758	718	DMU3
37	1315	18.55	12.07	%5.30	1500	682	DMU4
34	787	39.10	11.96	%17	745	643	DMU5
10	510	69	13.66	%3	517	555	DMU6

Before implementation, a linear two-level program as per *Model (5)* is formulated as follows:

$$
\begin{aligned}
\max \quad & (u_{11}y_{11p} + u_{21}{}_{21p} + u_{31}y_{31p}) + (u_{12}y_{12p} + u_{22}y_{22p} + u_{32}y_{32p} \\
& + u_{42}y_{42p}) + (u_{13}y_{13p} + u_{23}y_{23p}) + (u_{14}y_{14p}), \\
\text{s.t.} \quad & (v_{11}x_{11p} + v_{21}x_{21p}) + (v_{12}x_{12p}) + (v_{13}x_{13p} + v_{23}x_{23p}) \\
& + (v_{14}x_{14p} + v_{24}x_{24p}) = 1, \\
& (u_{11}y_{11j} + u_{21}{}_{21p} + u_{31}y_{31j}) + (u_{12}y_{12j} + u_{22}y_{22j} + u_{32}y_{32j} + u_{42}y_{42j}) \\
& +(u_{13}y_{13j} + u_{23}y_{23j}) + (u_{14}y_{14j})\_(v_{11}x_{11j} + v_{21}x_{21j}) + (v_{12}x_{12j}) + (v_{13}x_{13j} + v_{23}x_{23j}), \\
& (v_{14}x_{14j} + v_{24}x_{24j}) \le 0 \qquad j = 1\ldots10, \\
& u_{11} + u_{21} + u_{31} = u_1, \\
& u_{12} + u_{22} + u_{32} + u_{42} = u_2, \\
& u_{13} + u_{23} = u_3, \\
& u_{14} = u_4, \\
& v_{11} + v_{21} = v_1, \\
& v_{12} = v_2, \\
& v_{13} + v_{23} = v_1, \\
& v_{14} + v_{24} = v_1, \\
& v_{ik} \ge 0, \qquad u_{rt} \ge 0.
\end{aligned}
\tag{8}
$$

The results of implementing the above model and execution of the single-level model are presented in *Table 3*.

Table 3. Results with single- level and two-level models.

Name of Unit	DMU1	DMU2	DMU3	DMU4	DMU5	DMU6
Efficiency (two-level model)	0.864	0.967	1	0.687	0.726	0.576
Efficiency (single-level model)	0.9254	1	1	0.8612	0.7576	0.6574

Looking at the above table, we see that in the two-level model, DMU3, and the single-level model, DMUs 2 & 3 are more efficient than other units. The most serious inefficiency is related to DMU6, and other DMUs have less inefficiency. With a closer look at the table, we understand that the efficiency gained in the two-level model is not more than the two-level model due to their constraints.

6 | Conclusion

As we mentioned before, identifying different models of performance assessment and the correct identification and application of these models in social organizations are among the critical points. Techniques such as DEA and BSC are tools that, although they may not be presented as alternative techniques, can lead to positive results when used in combination. The systematic perspective of BSC

Navabakhsh and Shahsavari Pour| Com. Alg. Num. Dim. 2(2) (2023) 113-123

in four aspects, in fact, leads the organization on its route to a strategy and is a critical complement for DEA in assessing the organization to make appropriate decisions.

References

[1] Charnes, A., Cooper, W. W., & Rhodes, E. (1978). Measuring the efficiency of decision making units. *European journal of operational research*, *2*(6), 429–444.

[2] Eilat, H., Golany, B., & Shtub, A. (2008). R&D project evaluation: An integrated DEA and balanced scorecard approach. *Omega*, *36*(5), 895–912. DOI:10.1016/j.omega.2006.05.002

[3] Eilat, H., Golany, B., & Shtub, A. (2006). Constructing and evaluating balanced portfolios of R&D projects with interactions: A DEA based methodology. *European journal of operational research*, *172*(3), 1018–1039. DOI:10.1016/j.ejor.2004.12.001

[4] Banker, R. D., Charnes, A., & Cooper, W. W. (1984). Some models for estimating technical and scale inefficiencies in data envelopment analysis. *Management science*, *30*(9), 1078–1092.

[5] Kaplan, R. S., & Norton, D. P. (2007). Using the balanced scorecard as a strategic management system. *Harvard business review*, *85*(7–8), 35-48.

[6] Bremser, W. G., & Barsky, N. P. (2004). Utilizing the balanced scorecard for R&D performance measurement. *R and d management*, *34*(3), 229–238. DOI:10.1111/j.1467-9310.2004.00335.x

[7] Chen, T. Y., Chen, C. B., & Peng, S. Y. (2008). Firm operation performance analysis using data envelopment analysis and balanced scorecard: A case study of a credit cooperative bank. *International journal of productivity and performance management*, *57*(7), 523–539. DOI:10.1108/17410400810904010

[8] Farrell, M. J. (1957). The measurement of productive efficiency. *Journal of the royal statistical society series a: statistics in society*, *120*(3), 253–281.

[9] Smith, P. C., Charnes, A., Cooper, W., Lewin, A. Y., & Seiford, L. M. (1997). Data Envelopment Analysis Theory, Methodology and Applications. *The journal of the operational research society*, *48*(3), 332. DOI:10.2307/3010433